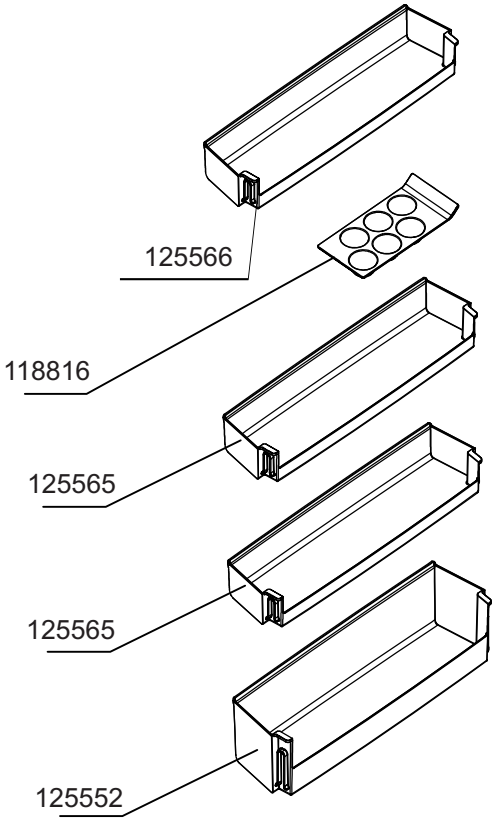
125566
118816
125565
125565
125552

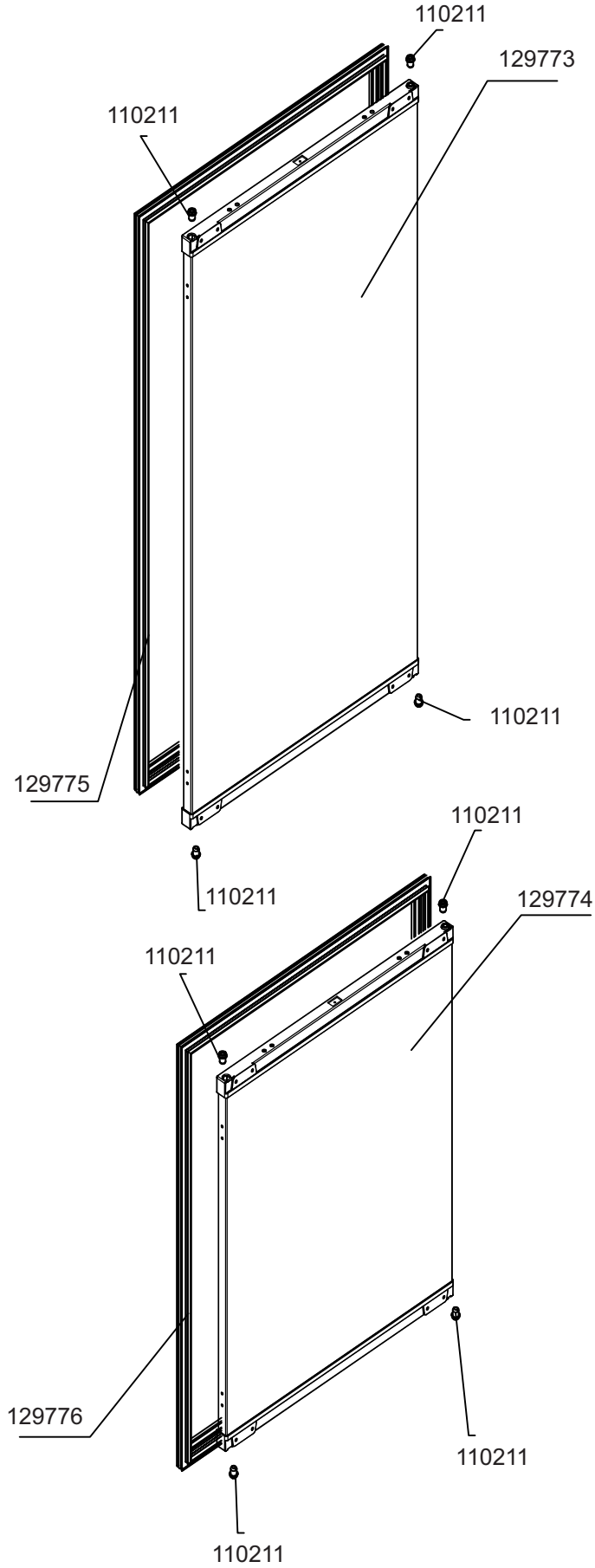
110211
129773
110211
110211
129775
110211
110211
129774
110211
129776
110211
110211

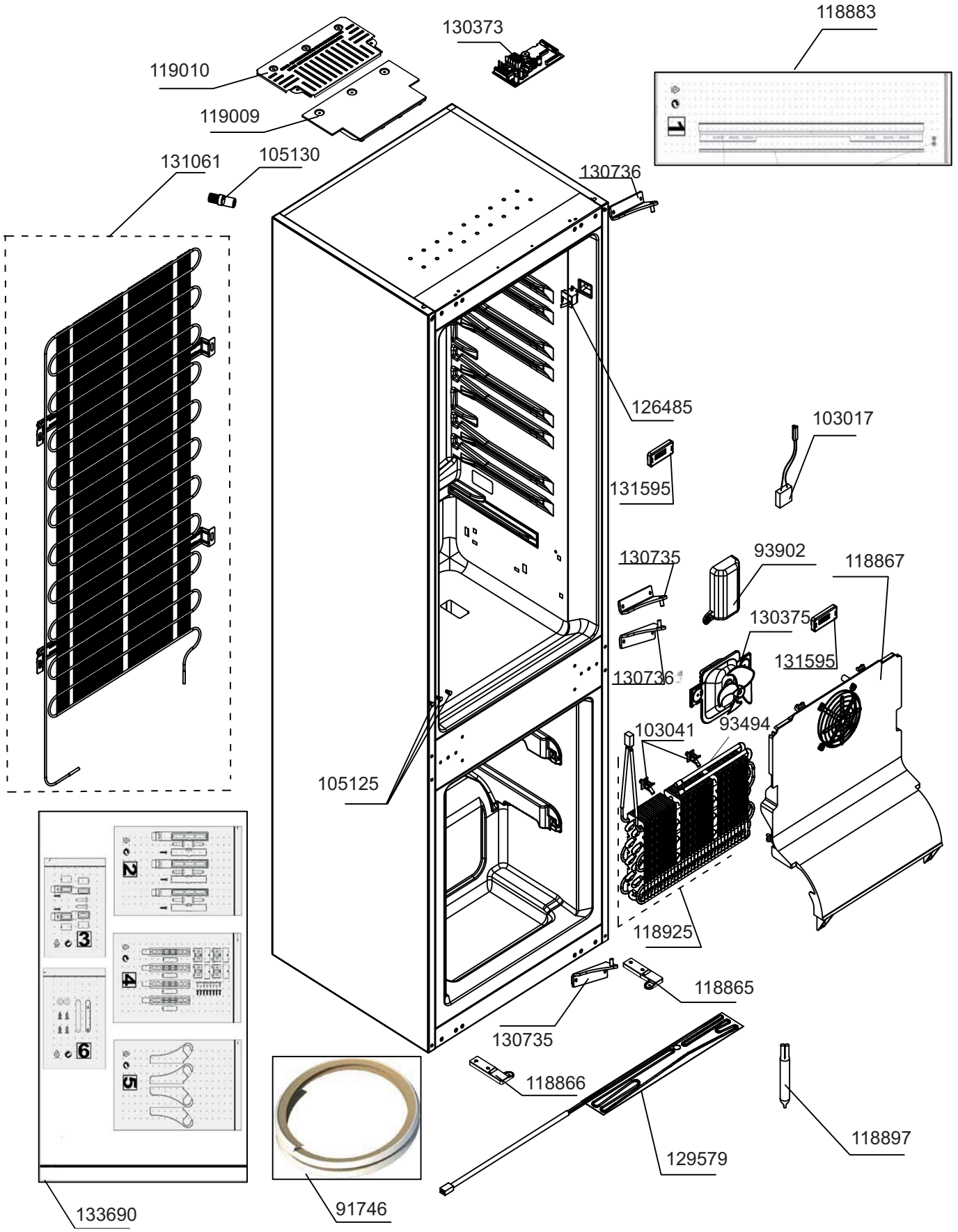
118883
130373
119010
119009
131061
105130
130736
126485
103017
131595
130735
93902
118867
130375
131595
130736
103041
93494
105125
118925
118865
130735
118866
118897
129579
133690
91746

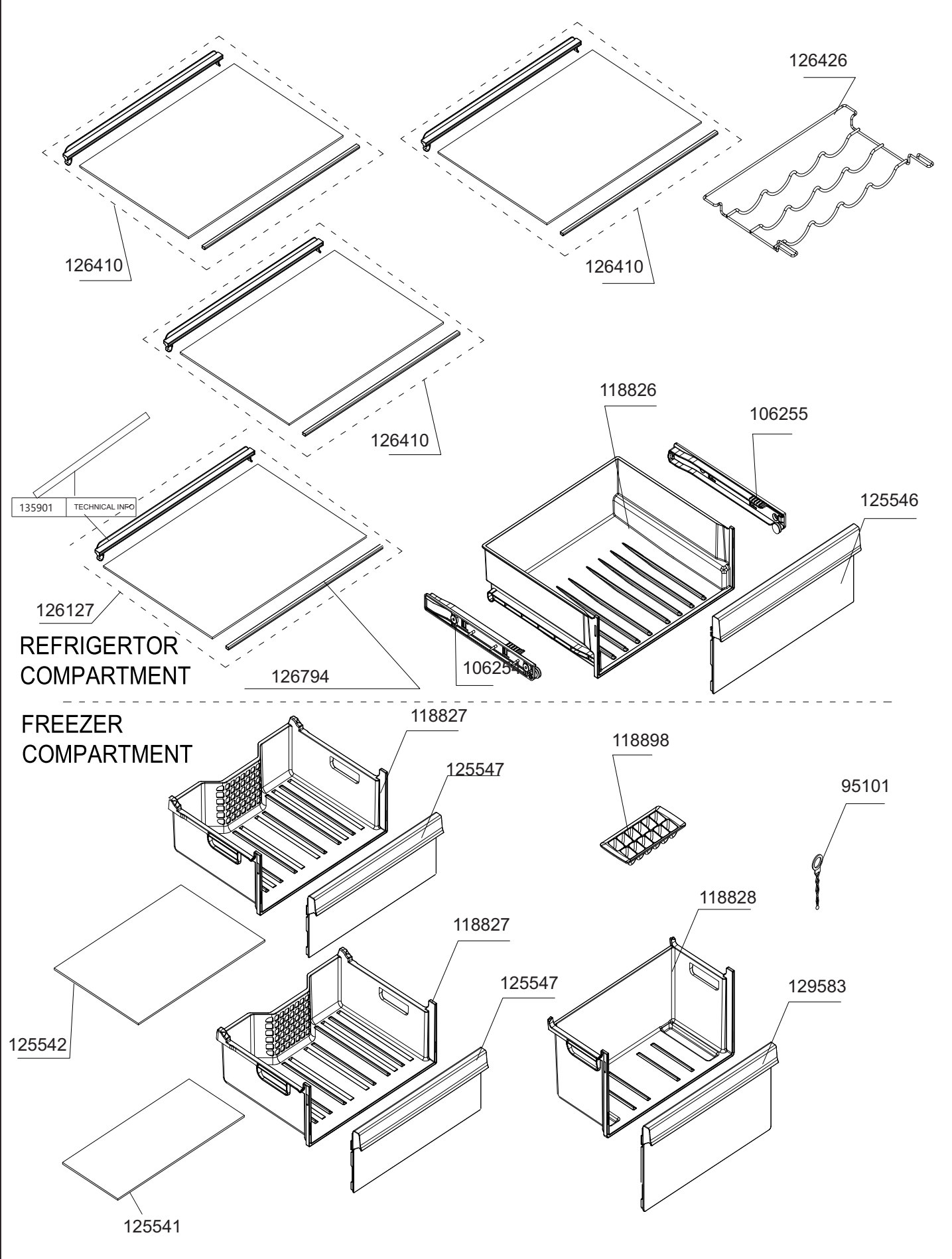
126426
126410
126410
126410
118826
106255
125546
135901
TECHNICAL INFO
126127
REFRIGERTOR
COMPARTMENT
126794
FREEZER
COMPARTMENT
118827
125547
118898
95101
118828
118827
125547
129583
125542
125541

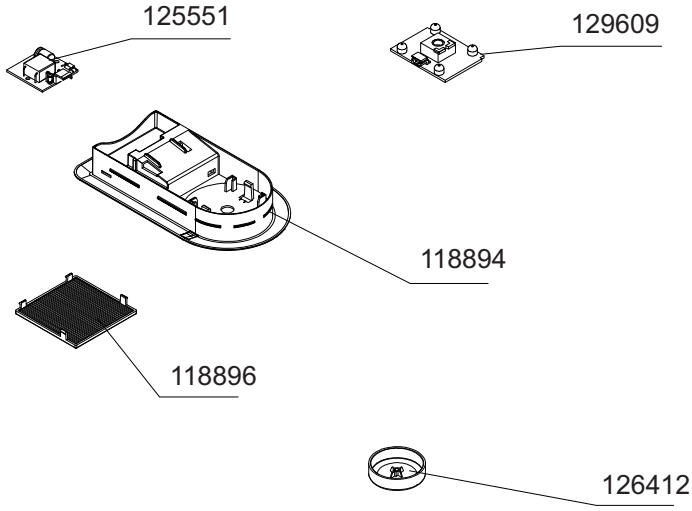
125551
129609
118894
118896
126412

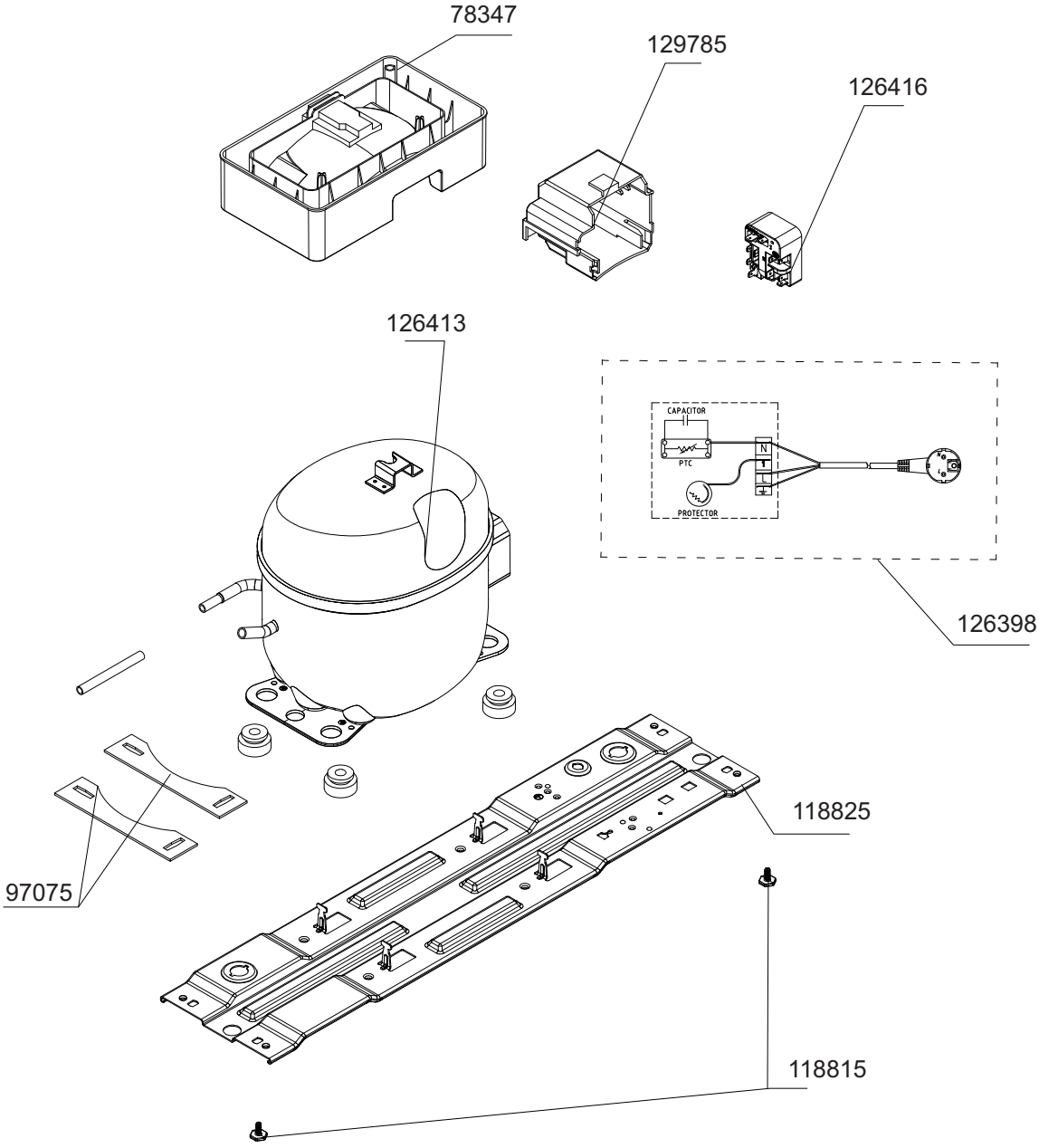
78347
129785
126416
126413
CAPACITOR
PTC
PROTECTOR
N
126398
118825
97075
118815